AZURI®

Service Manual

AZI-CR35VB/I
AZI-CR50VB/I
AZI-CR70VB/I

Table of Contents

Part Ⅰ : Technical Information 1

1. Summary 1

2. Specification 2

2.1 Specification Sheet 2

3. Outline Dimension Diagram 5

4. Refrigerant System Diagram 6

5. Electrical Part 7

5.1 Wiring Diagram 7

5.2 PCB Printed Diagram 9

6. Function and Control 10

6.1 Remote Controller Introduction 10

6.2 Brief Description of Modes and Functions 14

Part Ⅱ : Installation and Maintenance 17

7. Notes for Installation and Maintenance 17

8. Installation 20

8.1 Installation Dimension Diagram 20

8.2 Installation of Cassette Type 21

9. Maintenance 23

9.1 Error Code List 23

9.2 Troubleshooting for Main Malfunction 24

9.3 Maintenance Method for Normal Malfunction 30

10. Removal Procedure 32

Part Ⅰ : Technical Information

1. Summary

Indoor Unit

AZI-CR35VB/I
AZI-CR50VB/I

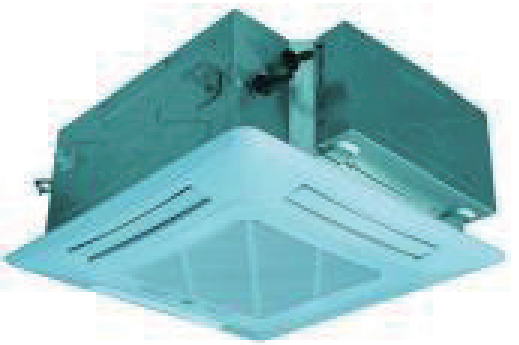

AZI-CR70VB/I

Remote Controller

YT1F(MOTO)

2. Specification

2.1 Specification Shee

Parameter		Unit	Value	
Model			AZI-CR35VB/I	AZI-CR50VB/I
Product Code			CN510N0120	CN510N0130
Power Supply	Rated Voltage	V~	220-240	220-240
	Rated Frequency	Hz	50	50
	Phases		1	1
Cooling Capacity		KW	3.50	4.50
Heating Capacity		KW	4.00	5.0
Air flow volume(SH/H/M/L/SL)		m^3/h	650/560/520/450/-	710/670/590/450/-
Dehumidifying Volume		L/h	1.4	1.8
Fan Type			Centrifugal	Centrifugal
Fan Diameter-height		mm	Φ322–148	Φ322–148
Fan Motor Cooling Speed(SH/H/M/L/SL)		rpm	800/700/650/560/-	900/850/750/580/-
Fan Motor Heating Speed(SH/H/M/L/SL)		rpm	800/700/650/580/-	900/850/750/600/-
Fan Motor Power Output		W	45	45
Fan motor running current		A	/	/
Fan Motor Capacitor		μF	/	/
Evaporator Material			Aluminum fin-copper tube	Aluminum fin-copper tube
Evaporator Pipe Diameter		mm	Φ7	Φ7
Evaporator Number of Rows-Fin Pitch		mm	2-1.4	2-1.4
Evaporator Length(L)XHeight(H)XWidth(W)		mm	1320X190.5X25.4	1320X190.5X25.4
Fuse Current		A	5	5
Sound Pressure Level(SH/H/M/L/SL)		dB (A)	44/41/38/34/-	47/45/41/35/-
Sound Power Level(SH/H/M/L/SL)		dB (A)	55/52/49/45/-	58/56/52/46/-
Dimension of Outline(LXWXH)		mm	596X596X240	596X596X240
Dimension of Carton Box(LXWXH)		mm	775X735X285	775X735X285
Dimension of Package(LXWXH)		mm	778X738X300	778X738X300
Net Weight		kg	20	20
Gross Weight		kg	24	24
Liquid pipe		mm	Φ6	Φ6
Gas Pipe(to indoor unit)		mm	Φ9.52	Φ12

The above data is subject to change without notice. Please refer to the nameplate of the unit.

Parameter		Unit	Value
Model			AZI-CR70VB/I
Product Code			CN510N0140
Power Supply	Rated Voltage	V~	220-240
	Rated Frequency	Hz	50
	Phases		1
Cooling Capacity		KW	7.10
Heating Capacity		KW	8.0
Air flow volume(SH/H/M/L/SL)		m^3/h	1280/1220/1100/880/-
Dehumidifying Volume		L/h	2.5
Fan Type			Centrifugal
Fan Diameter-height		mm	Φ450-142
Fan Motor Cooling Speed(SH/H/M/L/SL)		rpm	650/620/560/450/-
Fan Motor Heating Speed(SH/H/M/L/SL)		rpm	650/620/560/460/-
Fan Motor Power Output		W	45
Fan motor running current		A	/
Fan Motor Capacitor		μF	/
Evaporator Material			Aluminum fin-copper tube
Evaporator Pipe Diameter		mm	Φ7
Evaporator Number of Rows-Fin Pitch		mm	2-1.5
Evaporator Length(L)XHeight(H)XWidth(W)		mm	1965X171.5X25.4
Fuse Current		A	5
Sound Pressure Level(SH/H/M/L/SL)		dB (A)	47/45/41/36/-
Sound Power Level(SH/H/M/L/SL)		dB (A)	58/56/52/47/-
Dimension of Outline(LXWXH)		mm	840X840X240
Dimension of Carton Box(LXWXH)		mm	960X960X310
Dimension of Package(LXWXH)		mm	963X963X325
Net Weight		kg	26
Gross Weight		kg	32
Liquid pipe		mm	Φ9.52
Gas Pipe(to indoor unit)		mm	Φ16

The above data is subject to change without notice. Please refer to the nameplate of the unit.

Note: Nominal capacities are based on the follow conditions.

Mode	Indoor ℃(°F)	Outdoor ℃(°F)
Cooling	DB:27 (80.6)	DB:35(95)
	WB:19 (66.2)	WB:24(75.2)
Heating	DB:20 (68)	DB:7(44.6)
	WB:--(--)	WB:6 (42.8)
Piping Length	5m	

The air volume is measured at the relevant standard external static pressure.

Noise is tested in the semianechoic room, so it should be slightly higher in the actual operation due to environmental change.

3. Outline Dimension Diagram

AZI-CR35VB/I AZI-CR50VB/I

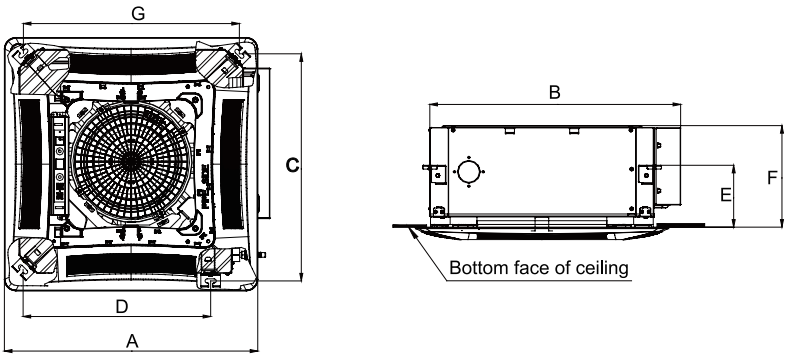

AZI-CR70VB/I

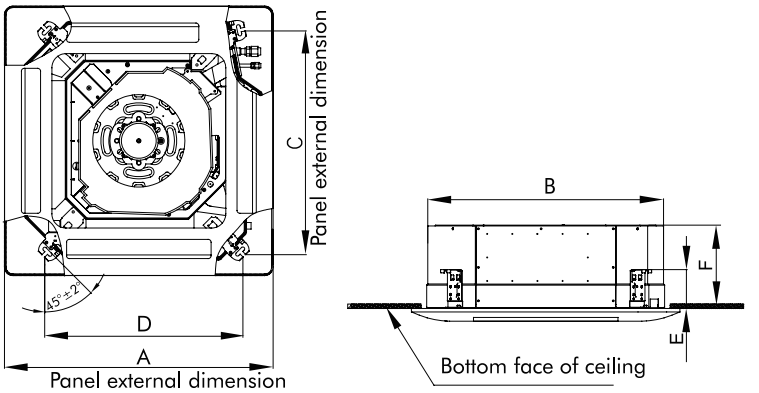

Unit:mm

Item / Model	A	B	C	D	E	F	G
AZI-CR35VB/I	670	666	600	496	145	240	596
AZI-CR50VB/I							
AZI-CR70VB/I	950	840	780	680	145	240	-

4. Refrigerant System Diagram

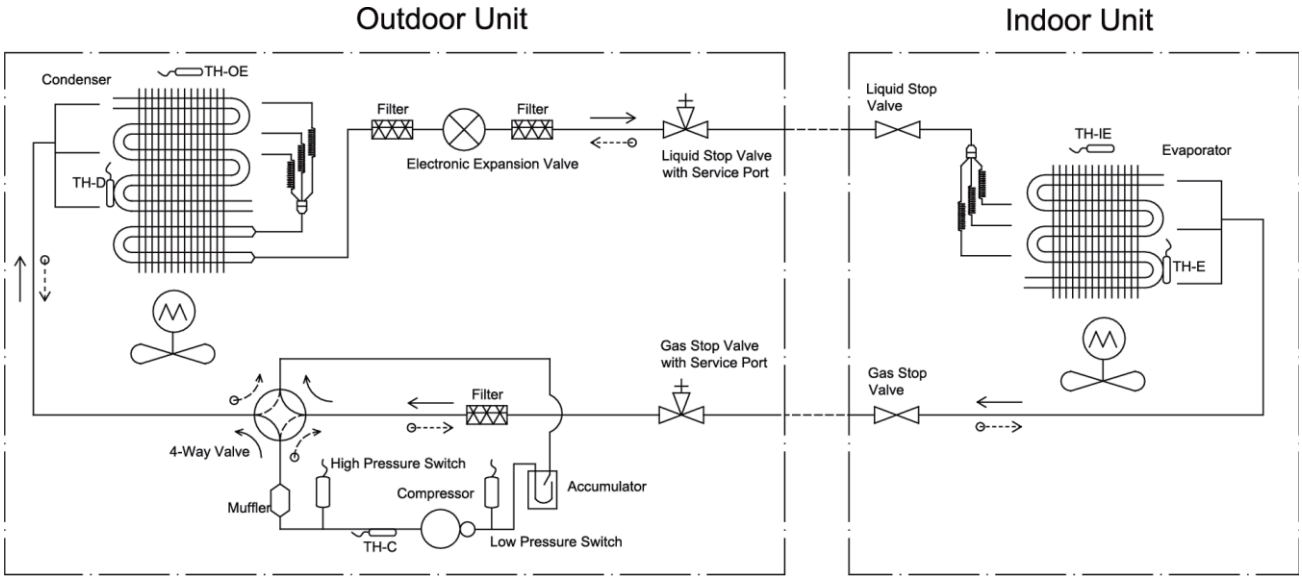

TH-OE: Outdoor Environment Thermal Bulb
TH-C: Outdoor Condenser Thermal Bulb
TH-D: Compressor Discharge Thermal Bulb

← Cooling
⊖----> Heating

TH-IE: Indoor Environment Thermal Bulb
TH-E: Indoor Evapolator Thermal Bulb

Note:
1.it is just a schematic diagram and some parts may differ from the real objects inside the unit.

5. Electrical Part

5.1 Wiring Diagram

● Instruction

Symbol	Symbol Color	Symbol	Symbol Color	Symbol	Name
WH	White	GN	Green	CAP	Jumper cap
YE	Yellow	BN	Brown	COMP	Compressor
RD	Red	BU	Blue	⏚	Grounding wire
YEGN	Yellow/Green	BK	Black	/	/
VT	Violet	OG	Orange	/	/

Note: Jumper cap is used to determine fan speed and the swing angle of horizontal lover for this model.

● Indoor Unit

AZI-CR35VB/I AZI-CR50VB/I

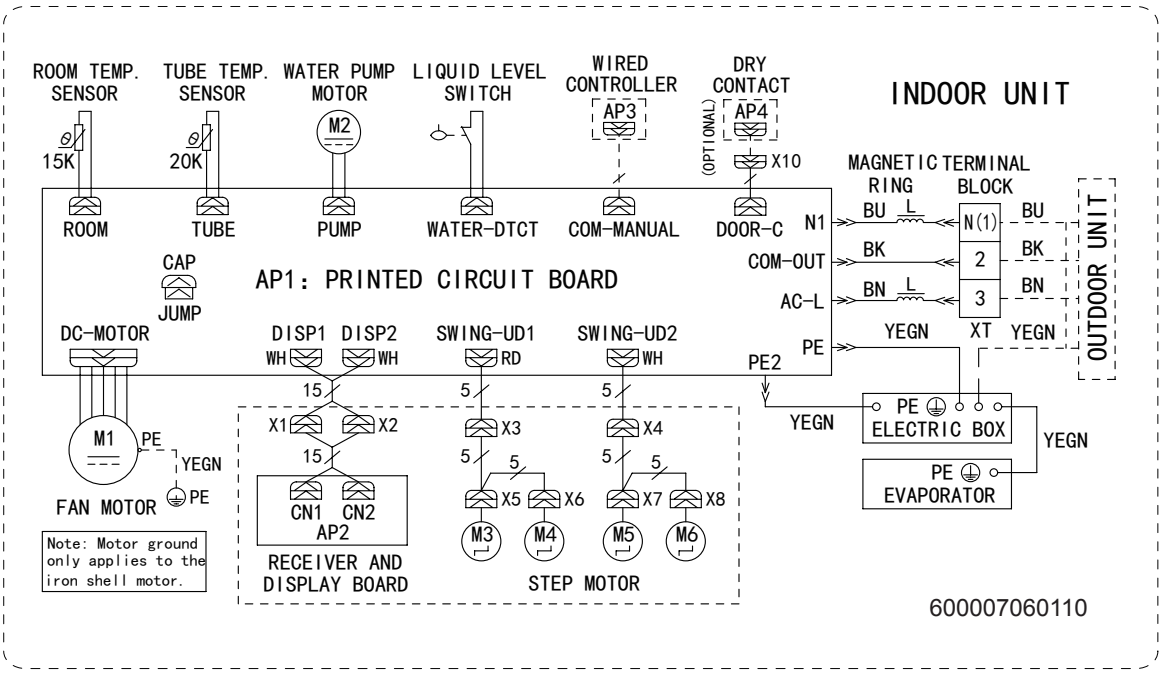

AZI-CR70VB/I

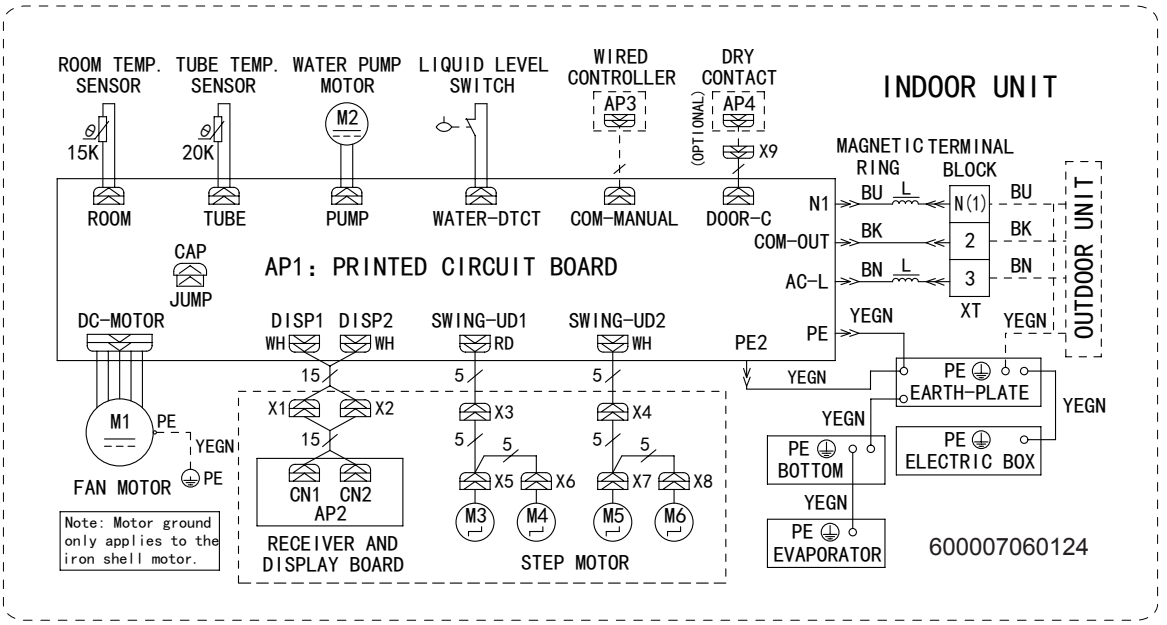

These circuit diagrams are subject to change without notice, please refer to the one supplied with the unit.

5.2 PCB Printed Diagram

˜ T op view

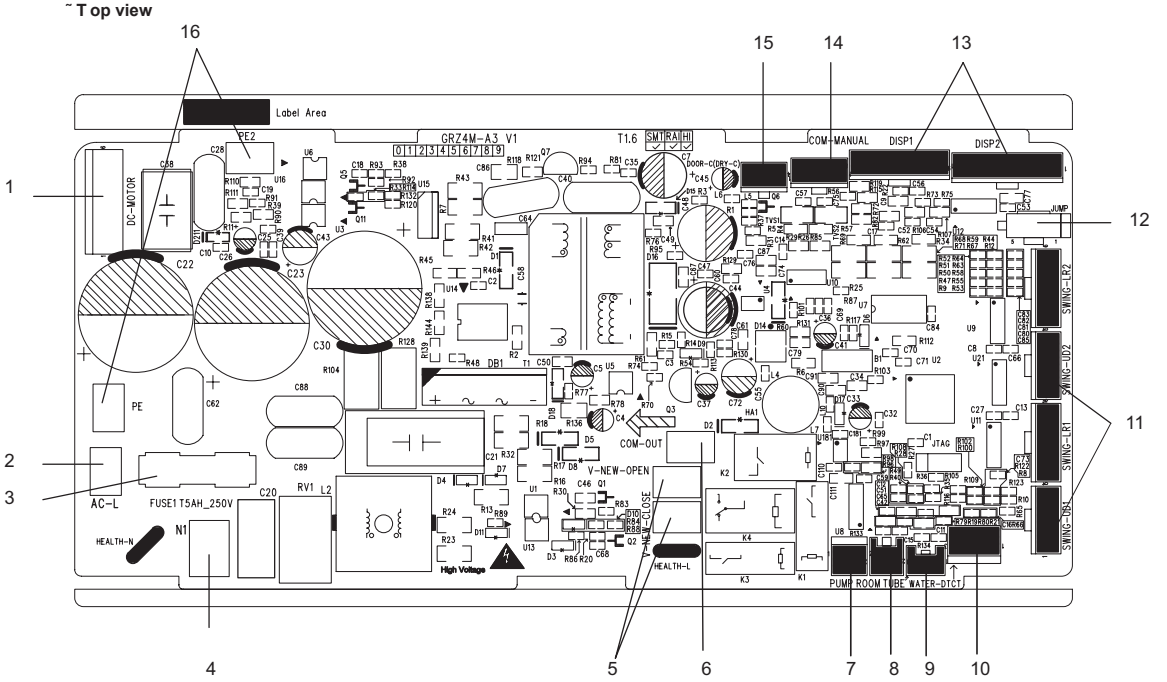

No.	Name
1	Interface of fan
2	Interface of live wire
3	Fuse
4	Interface of netural wire
5	Air terminal
6	Terminal with outdoor unit communication wire
7	Water pump control
8	Interface of ambient temperature sensor
9	Interface of tube temperature sensor
10	Water full detection terminal
11	Up&down swing motor
12	Jumper cap terminal
13	Display interface
14	Wired controller
15	Interface of gate-control detection
16	Grounding wire

˜ Bottom view

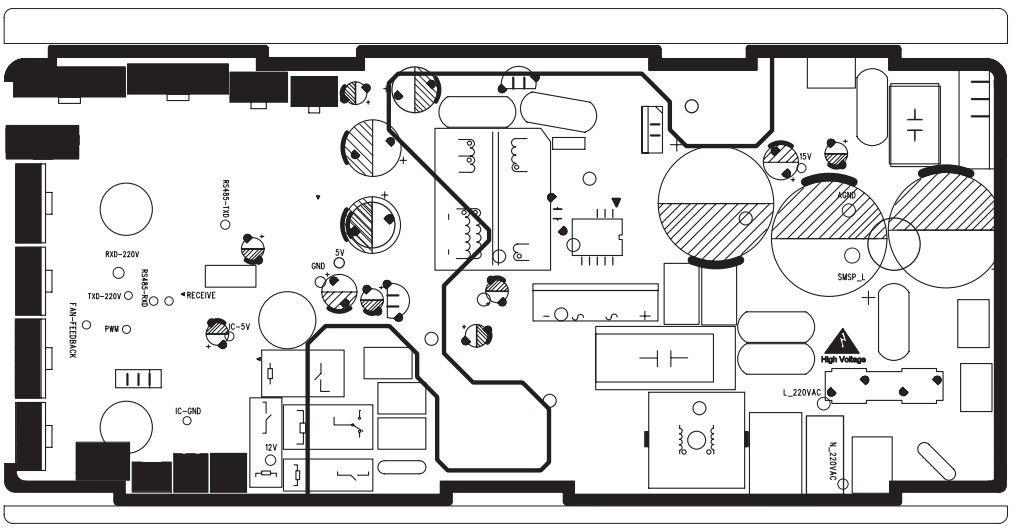

6. Function and Control

6.1 Remote Controller Introduction

Buttons on remote controller

1. ON/OFF button
2. MODE button
3. +/- button
4. FAN button
5. I FEEL button
6. button
7. button
8. button
9. CLOCK button
10. TIMER ON/TIMER OFF button
11. X-FAN button
    Note: X-FAN is the same with BLOW
12. TEMP button
13. TURBO button
14. SLEEP button
15. LIGHT button

Introduction for icons on display screen

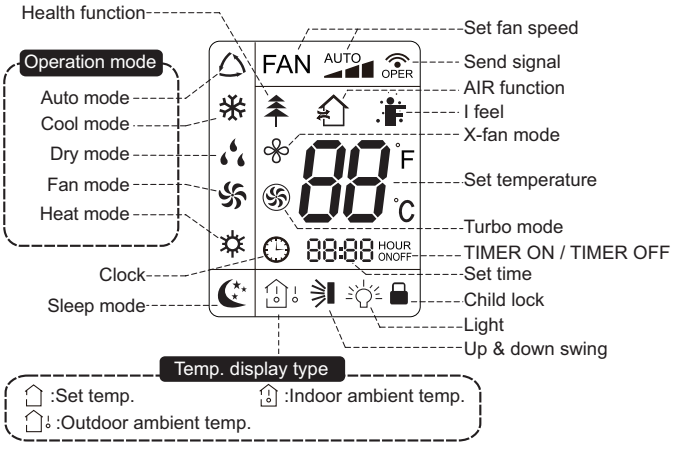

Introduction for buttons on remote controller

Note:

- This is a general use remote controller, it could be used for the air conditioners with multifunction; For some function, which the model doesn't have, if press the corresponding button on the remote controller that the unit will keep the original running status.
- After putting through the power, the air conditioner will give out a sound. Operation indictor "⏻" is ON (red indicator). After that, you can operate the air conditioner by using remote controller.

1.ON/OFF button

Press this button can turn on or turn off the air conditioner. After turning on the air conditioner, operation indicator "⏻" on indoor unit's display is ON (green indicator. The colour is different for different models), and indoor unit will give out a sound.

2. MODE button

Press this button to select your required operation mode.

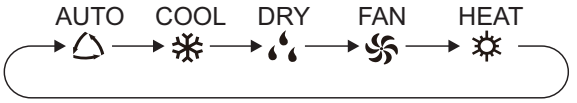

- After selecting auto mode, air conditioner will operate automatically according to ambient temperature. Set temperature can't be adjusted and will not be displayed as well. Press " FAN" button can adjust fan speed. Press " " button can adjust fan blowing angle.
- After selecting cool mode, air conditioner will operate under cool mode. Cool indicator " "on indoor unit is ON. Press "+" or "-" button to adjust set tempe rature. Press "FAN" button to adjust fan speed. Press " " button to adjust fan blowing angle.
- When selecting dry mode, the air conditioner operates at low speed under dry mode. Dry indicator " " on indoor unit is ON. Under dry mode, fan speed can't be adjusted. Press " " button to adjust fan blowing angle.
- When selecting fan mode, the air conditioner will only blow fan, no cooling and no heating. All indicators are OFF. Operation indicator is ON. Press " FAN" button to adjust fan speed. Press " " button to adjust fan blowing angle.
- When selecting heating mode, the air conditioner operates under heat mode. Heat indicator " " on indoor unit is ON. Press "+" or "-" button to adjust set temperature. Press "FAN" button to adjust fan speed. Press " " button to adjust fan blowing angle. (Cooling only unit won't receive heating mode signal. If setting heat mode with remote controller, press ON/OFF button can't start up the unit).

Note:

- For preventing cold air, after starting up heating mode, indoor unit will delay 1~5minutes to blow air (actual delay time is depend on indoor ambient temperature).
- Set temperature range from remote controller: 16~30℃ ; Fan speed: auto, low speed, medium speed, high speed.

3. +/- button

- Press "+" or "-" button once increase or decrease set temperature 1℃ . Holding "+" or "-" button, 2s later, set temperature on remote controller will change quickly. On releasing button after setting is finished, temperature indicator on indoor unit will change accordingly. (Temperature can't be adjusted under auto mode)
- When setting TIMER ON, TIMER OFF or CLOCK, press "+" or "-" button to adjust time. (Refer to CLOCK, TIMER ON, TIMER OFF buttons) When setting TIMER ON, TIMER OFF or CLOCK, press "+" or "-" button to adjust time. (Refer to CLOCK, TIMER ON, TIMER OFF buttons)

4. FAN button

Pressing this button can set fan speed circularly as: auto (AUTO), low( ) ,medium ( ), high( ).

Note:

- Under AUTO Speed,IDU fan motor will adjust the fan speed (high, medium or low speed) according to ambient temperature.
- Fan speed under dry mode is low speed.

5. I FEEL button

Press this button to start I FEEL function and " " will be displayed on the remote controller. After this function is set, the remoteed controller will send the detect ambient temperature to the controller and the unit will automatically adjust the indoor temperature according to the detected temperature. Press this button again to close I FEEL function and " " will disappear.

- Please put the remote controller near user when this function is set. Do not put the remote controller near the object of high temperature or low temperature in order to avoid detecting inaccurate ambient temperature.
- When I FEEL function is turned on, the remote controller should be put within the area where indoor unit can receive the signal sent by the remote controller.

6. button

Press this button to set HEALTH function ON or OFF. After the unit is turned on, it defaults to HEALTH function ON.

- This function is applicable to partial of models.

7. button

Press this button to select AIR function ON or OFF. (Only available for some models)

8. button

Press this button can select up&down swing angle. Fan blow angle can be selected circularly as below:

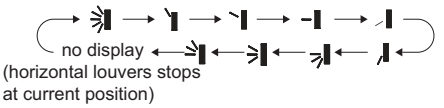

- When selecting " ", air conditioner is blowing fan automatically. Horizontal louver will automatically swing up & down at maximum angle.
- When selecting " ", air conditioner is blowing fan at fixed position. Horizontal louver will stop at the fixed position.
- When selecting " ", air conditioner is blowing fan at fixed angle. Horizontal louver will send air at the fixed angle.
- Hold "button above 2s to set your required swing angle. When reaching your required angle, release the button.

Note:

- " " may not be available. When air conditioner receives this signal, the air conditioner will blow fan automatically.

9. CLOCK button

Press this button to set clock time. " " icon on remote controller will blink. Press "+" or "-" button within 5s to set clock time. Each pressing of "+" or "-" button, clock time will increase or decrease 1 minute. If hold "+" or "-" button, 2s later, time will change quickly. Release this button when reaching your required time. Press "CLOCK" button to confirm the time. " " icon stops blinking.

Note:

- Clock time adopts 24-hour mode.
- The interval between two operation can't exceeds 5s. Otherwise, remote controller will quit setting status. Operation for TIMER ON/TIMER OFF is the same.

10. TIMER ON / TIMER OFF button

- TIMER ON button

"TIMER ON" button can set the time for timer on. After pressing this button, " " icon disappears and the word "ON" on remote controller blinks. Press "+" or "-" button to adjust TIMER ON setting. After each pressing "+" or "-" button, TIMER ON setting will increase or decrease 1min. Hold "+" or "-" button, 2s later, the time will change quickly until reaching your required time.

Press "TIMER ON" to confirm it. The word "ON" will stop blinking. " " icon resumes displaying. Cancel TIMER ON: Under the condition that TIMER ON is started up, press "TIMER ON" button to cancel it.

- TIMER OFF button

"TIMER OFF" button can set the time for timer off. After pressing this button," " icon disappears and the word "OFF" on remote controller blinks. Press "+" or "-" button to adjust TIMER OFF setting. After each pressing "+" or "-" button, TIMER OFF setting will increase or decrease 1min. Hold "+" or "-" button, 2s later, the time will change quickly until reaching your required time.

Press "TIMER OFF" word "OFF" will stop blinking. " " icon resumes displaying. Cancel TIMER OFF. Under the condition that TIMER OFF is started up, press "TIMER OFF" button to cancel it.

Note:

- Under on and off status, you can set TIMER OFF or TIMER ON simultaneously.
- Before setting TIMER ON or TIMER OFF, please adjust the clock time.
- After starting up TIMER ON or TIMER OFF, set the constant circulating valid.After that, air conditioner will be turned on or turned off according to setting time.ON/OFF button has no effect on setting. If you don't need this function, please use remote controller to cancel it.

11. X-FAN button

Press this button under cool and dry mode to start up x-fan function, and " " icon on remote controller will be displayed. Press this button again to cancel x-fan function, and " "icon will disappear.

Note:

- When x-fan function is on, if the air conditioner is turned off, indoor fan will still operate at low speed for a while to blow the residual water inside the air duct.
- During x-fan operation, press X-FAN button to turn off x-fan function. Indoor fan will stop operation immediately.

12. TEMP button

By pressing this button, you can see indoor set temperature, indoor ambient temperature or outdoor ambient temperature on indoor unit's display. The setting on remote controlleris selected circularly as below:

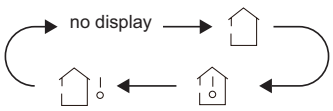

- When selecting " " or no display with remote controller, temperature indicator on indoor unit displays set temperature.
- When selecting " " with remote controller, temperature indicator on indoor unit displays indoor ambient temperature.

- When selecting "" with remote controller, temperature indicator on indoor unit displays outdoor ambient temperature.

Note:

- Outdoor temperature display is not available for some models. At that time, indoor unit receives "" signal, while it displays indoor set temperature.
- It's defaulted to display set temperature when turning on the unit.There is no display in the remote controller.
- Only for the models whose indoor unit has dual-8 display.
- When selecting displaying of indoor or outdoor ambient temperature, indoor temperature indicator displays corresponding temperature and automatically turn to display set temperature after three or five seconds.

13. TURBO button

Under COOL or HEAT mode, press this button to turn to quick COOL or quick HEAT mode. "" icon is displayed on remote controller. Press this button again to exit turbo function and "" icon will disappear.

14. SLEEP button

Under COOL, HEAT mode, press this button to start up sleep function. "" icon is displayed on remote controller. Press this button again to cancel sleep function and "" icon will disappear.

15. LIGHT button

Press this button to turn off display light on indoor unit. "" icon on remote controller disappears. Press this button again to turn on display light. "" icon is displayed.

Function Introduction for Combination Buttons

Child lock function:

Press "+"and "-" simultaneously to turn on or turn off child lock function. When child lock function is on," " icon is displayed on remote controller. If you operate the remote controller, it won't send signal.

Temperature display switchover function:

Under OFF status, press "-" and "MODE" buttons simultaneously to switch temperature display between °C and °F .

Operation Guide

1. After putting through the power, press "ON/OFF" button on remote controller to turn on the air conditioner.
2. Press "MODE" button to select your required mode:AUTO,COOL,DRY,FAN,HEAT.
3. Press "+" or "-" button to set your required temperature. (Temperature can't be adjusted under auto mode).
4. Press "FAN" button to set your required fan speed: auto, low, medium and high speed.
5. Press " " button to select fan blowing angle.

Replacement of Batteries in Remote Controller

1.Press the back side of remote controller marked with" OPEN "as shown in the fig, and then push out the cover of battery box along the arrow direction.

2. Replace two 7# (AAA 1.5V) dry batteries, and make sure the position of "+" polar and "-" polar are correct.
3. Reinstall the cover of battery box.

Note:

- During operation, point the remote control signal sender at the receiving window on indoor unit.
- The distance between signal sender and receiving window should be no more than 8m, and there should be no obstacles between them.
- Signal may be interfered easily in the room where there is fluorescent lamp or wireless telephone; remote controller should be close to indoor unit during operation.
- Replace new batteries of the same model when replacement is required.
- When you don't use remote controller for a long time, please take out the batteries.
- If the display on remote controller is fuzzy or there's no display, please replace batteries.

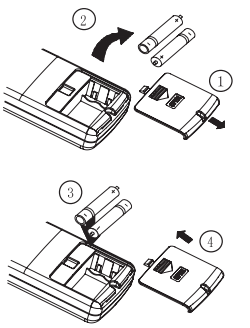

Sketch map for replacing batteries

6.2 Brief Description of Modes and Functions

1.Basic function of system

(1)Cooling mode

(1) Under this mode, fan and swing operates at setting status. Temperature setting range is 16~30°C.

(2) During malfunction of outdoor unit or the unit is stopped because of protection, indoor unit keeps original operation status.

(2)Drying mode

(1) Under this mode, fan operates at low speed and swing operates at setting status. Temperature setting range is 16~30°C.

(2) During malfunction of outdoor unit or the unit is stopped because of protection, indoor unit keeps original operation status.

(3) Protection status is same as that under cooling mode.

(4) Sleep function is not available for drying mode.

(3)Heating mode

(1) Under this mode, Temperature setting range is 16~30°C.

(2) Working condition and process for heating mode:

When turn on the unit under heating mode, indoor unit enters into cold air prevention status. When the unit is stopped or at OFF status, and indoor unit has been started up just now, the unit enters into residual heat-blowing status.

(4)Working method for AUTO mode:

1.Working condition and process for AUTO mode:

a.Under AUTO mode, standard heating Tpreset=20°C and standard cooling Tpreset=25°C. The unit will switch mode automatically according to ambient temperature.

2.Protection function

a. During cooling operation, protection function is same as that under cooling mode.

b. During heating operation, protection function is same as that under heating mode.

3. Display: Set temperature is the set value under each condition. Ambient temperature is (Tamb.-Tcompensation) for heat pump unit and Tamb. for cooling only unit.

4. If theres I feel function, Tcompensation is 0. Others are same as above.

(5)Fan mode

Under this mode, indoor fan operates at set fan speed. Compressor, outdoor fan, 4-way valve and electric heating tube stop operation. Indoor fan can select to operate at high, medium, low or auto fan speed. Temperature setting range is 16~30°C.

2. Other control

(1) Buzzer

Upon energization or availably operating the unit or remote controller, the buzzer will give out a beep.

(2) Auto button

If press this auto button when turning off the unit, the complete unit will operate at auto mode. Indoor fan operates at auto fan speed and swing function is turned on. Press this auto button at ON status to turn off the unit.

(3) Auto fan

Heating mode: During auto heating mode or normal heating ode, auto fan speed will adjust the fan speed automatically according to ambient temperature and set temperature.

(4) Sleep

After setting sleep function for a period of time, system will adjust set temperature automatically.

(5) Timer function:

General timer and clock timer functions are compatible by equipping remote controller with different functions.

(6) Memory function

memorize compensation temperature, off-peak energization value.

Memory content: mode, up&down swing, light, set temperature, set fan speed, general timer (clock timer cant be memorized).

After power recovery, the unit will be turned on automatically according to memory content.

(7) Health function

During operation of indoor fan, set health function by remote controller. Turn off the unit will also turn off health function.

Turn on the unit by pressing auto button, and the health is defaulted ON.(Health function is not available for this unit)

(8)I feel control mode

After controller received I feel control signal and ambient temperature sent by remote controller, controller will work according to the ambient temperature sent by remote controller.

(9)Compulsory defrosting function

(1) Start up compulsory defrosting function

Under ON status, set heating mode with remote controller and adjust the temperature to 16°C. Press “+, -, +, -, +,-” button successively within 5s and the complete unit will enter into compulsory defrosting status. Meanwhile, heating indicator on indoor unit will ON 10s and OFF 0.5s successively. (Note: If complete unit has malfunction or stops operation due to protection, compulsory defrosting function can be started up after malfunction or protection is resumed.

(2) Exit compulsory defrosting mode

After compulsory defrosting is started up, the complete unit will exit defrosting operation according to the actual defrosting result, and the complete unit will resume normal heating operation.

(10)Refrigerant recovery function:

(1) Enter refrigerant recycling function

Within 5min after energizing (unit ON or OFF status is ok), continuously press LIGHT button for 3 times within 3s to enter refrigerant recycling mode; Fo is displayed and refrigerant recycling function is started. At this moment, the maintenance people closes liquid valve. After 5min, stick the thimble of maintenance valve with a tool. If there is no refrigerant spraying out, close the gas valve immediately and then turn off the unit to remove the connection pipe.

(2) Exit refrigerant recycling function

After entering refrigerant recycling mode, when receive any remote control signal or enter refrigerant recycling mode for 25min, the unit will exit refrigerant recycling mode automatically If the unit is in standby mode before refrigerant recycling, it will be still in standby mode after finishing refrigerant recycling; if the unit is in ON status before refrigerant recycling, it will still run in original operation mode.

(11)Ambient temperature display control mode

1. When user set the remote controller to display set temperature (corresponding remote control code: 01), current set temperature will be displayed.

2. Only when remote control signal is switched to indoor ambient temperature display status (corresponding remote control code: 10) from other display status (corresponding remote control code: 00, 01,11),controller will display indoor ambient temperature for 3s and then turn back to display set temperature.

Under this mode, indoor fan operates at set fan speed. Compressor, outdoor fan, 4-way valve and electric heating tube stop operation. Indoor fan can select to operate at high, medium, low or auto fan speed. Temperature setting range is 16~30°C.

(12)Off-peak energization function:

Adjust compressors minimum stop time. The original minimum stop time is 180s and then we change to:

The time interval between two start-ups of compressor cant be less than 180+T s(0≤T≤15). T is the variable of controller. Thats to say the minimum stop time of compressor is 180s~195s. Read-in T into memory chip when refurbish the memory chip each time. After power recovery, compressor can only be started up after 180+T s at least.

(13) SE control mode

The unit operates at SE status.

(14) X-fan mode

When X-fan function is turned on, after turn off the unit, indoor fan will still operate at low speed for 2min and then the complete unit will be turned off. When x-fan function is turned off, after turn off the unit, the complete unit will be turned off directly.

(15) 8ºC heating function

Under heating mode, you can set 8ºC heating function by remote controller. The system will operate at 8ºC set temperature.

(16) Turbo fan control function

Set turbo function under cooling or heating mode to enter into turbo fan speed. Press fan speed button to cancel turbo wind.

No turbo function under auto, dry or fan mode.

(17)Instructions to the Error Indicating Lamps on the Panel of the Cassette Type Unit.

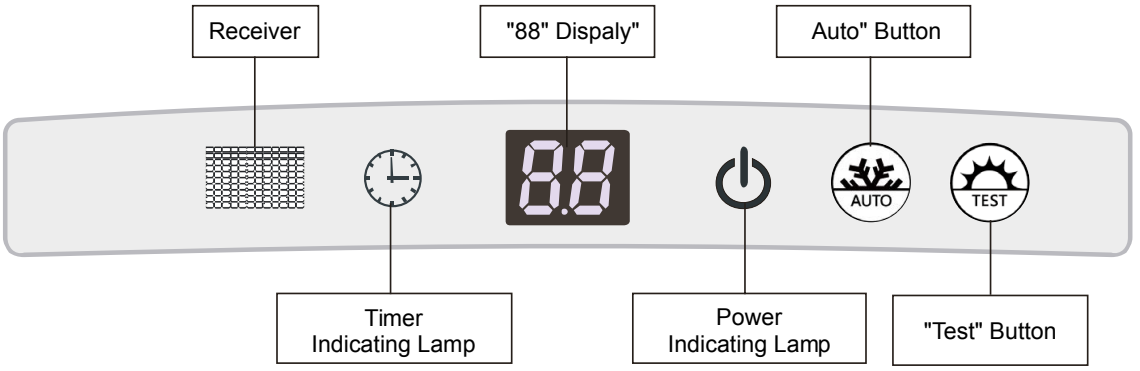

Power and ON/OFF Indicating Lamp:
It goes red when the unit is powered on while it goes white when the unit is started.

Timer Indicating Lamp:
Timer indicator on indoor unit will be on when timer ON is set under off status and timer OFF is set under on status.

“88” Display:
When there is no error, the dual-8 nixie tube display the set temperature. After receiving the command of displaying indoor ambient temperature from the remote controller, the dual-8 nixie tube displays indoor temperature for 3s and then resume to display the set temperature. If there is error, error code will be displayed. If there’s multiple error, error codes will be displayed in turn.

“Auto” button:
It’s used for turning on or turning off the unit. When use this button to turn in the unit, the unit is under auto mode.
“Test” button:It’s only used for the test units. This button is only valid within 3mins after the unit is energized.

NOTE:
(1) If the light of indoor unit is turned off, when operating the remote controller to send command, the display will be on for 3s and then off.the remote control command.
(2) When the wired controller is connected, the indoor unit display is invalid and the unit won’t receive

Part Ⅱ : Installation and Maintenance

7. Notes for Installation and Maintenance

Safety Precautions: Important!

Please read the safety precautions carefully before installation and maintenance.
The following contents are very important for installation and maintenance.

Please follow the instructions below.

●The installation or maintenance must accord with the instructions.
●Comply with all national electrical codes and local electrical codes.
●Pay attention to the warnings and cautions in this manual.
●All installation and maintenance shall be performed by distributor or qualified person
●All electric work must be performed by a licensed technician according to local regulations and the instructions given in this manual.
●Be caution during installation and maintenance. Prohibit incorrect operation to prevent electric shock, casualty and other accidents.

Warnings

Electrical Safety Precautions:

1. Cut off the power supply of air conditioner before checking and maintenance.
2. The air condition must apply specialized circuit and prohibit share the same circuit with other appliances.
3. The air conditioner should be installed in suitable location and ensure the power plug is touchable.
4. Make sure each wiring terminal is connected firmly during installation and maintenance.
5. Have the unit adequately grounded. The grounding wire cant be used for other purposes.
6. Must apply protective accessories such as protective boards, cable-cross loop and wire clip.
7. The live wire, neutral wire and grounding wire of power supply must be corresponding to the live wire, neutral wire and grounding wire of the air conditioner.
8. The power cord and power connection wires cant be pressed by hard objects.
9. If power cord or connection wire is broken, it must be replaced by a qualified person
10. If the power cord or connection wire is not long enough, please get the specialized power cord or connection wire from the manufacture or distributor. Prohibit prolong the wire by yourself.
11. For the air conditioner without plug, an air switch must be installed in the circuit. The air switch should be all-pole parting and the contact parting distance should be more than 3mm.
12. Make sure all wires and pipes are connected properly and the valves are opened before energizing.
13. Check if there is electric leakage on the unit body. If yes, please eliminate the electric leakage.
14. Replace the fuse with a new one of the same specification if it is burnt down; dont replace it with a cooper wire or conducting wire.
15. If the unit is to be installed in a humid place, the circuit breaker must be installed.

Installation Safety Precautions:

1. Select the installation location according to the requirement of this manual.(See the requirements in installation part)
2. Handle unit transportation with care; the unit should not be carried by only one person if it is more than 20kg.
3. When installing the indoor unit and outdoor unit, a sufficient fixing bolt must be installed; make sure the installation support is firm
4. Ware safety belt if the height of working is above 2m.
5. Use equipped components or appointed components during installation.
6. Make sure no foreign objects are left in the unit after fi - ishing installation.

Refrigerant Safety Precautions:

1. Avoid contact between refrigerant and fire as it generates poisonous gas; Prohibit prolong the connection pipe by welding.
2. Apply specified refrigerant onl . Never have it mixed with any other refrigerant. Never have air remain in the refrigerant line as it may lead to rupture or other hazards.
3. Make sure no refrigerant gas is leaking out when installation is completed.
4. If there is refrigerant leakage, please take sufficient measure to minimize the density of refrigerant.
5. Never touch the refrigerant piping or compressor without wearing glove to avoid scald or frostbite.

Improper installation may lead to fire hazard, explosion electric shock or injury.

Safety Precautions for Installing and Relocating the Unit:

To ensure safety, please be mindful of the following precautions.

Warnings

1. When installing or relocating the unit, be sure to keep the refrigerant circuit free from air or substances other than the specified refrigerant
Any presence of air or other foreign substance in the refrigerant circuit will cause system pressure rise or compressor rupture, resulting in injury.
2.When installing or moving this unit, do not charge the refrigerant which is not comply with that on the nameplate or unqualified refrigerant
Otherwise, it may cause abnormal operation, wrong action, mechanical malfunction or even series safety accident.
3.When refrigerant needs to be recovered during relocating or repairing the unit, be sure that the unit is running in cooling mode.Then, fully close the valve at high pressure side (liquid valve).About 30-40 seconds later, fully close the valve at low pressure side (gas valve), immediately stop the unit and disconnect power. Please note that the time for refrigerant recovery should not exceed 1 minute.
If refrigerant recovery takes too much time, air may be sucked in and cause pressure rise or compressor rupture, resulting in injury.
4.During refrigerant recovery, make sure that liquid valve and gas valve are fully closed and power is disconnected before detaching the connection pipe.
If compressor starts running when stop valve is open and connection pipe is not yet connected, air will be sucked in and cause pressure rise or compressor rupture, resulting in injury.
5.When installing the unit, make sure that connection pipe is securely connected before the compressor starts running.
If compressor starts running when stop valve is open and connection pipe is not yet connected, air will be sucked in and cause pressure rise or compressor rupture, resulting in injury.
6.Prohibit installing the unit at the place where there may be leaked corrosive gas or flammable gas
If there leaked gas around the unit, it may cause explosion and other accidents.
7.Do not use extension cords for electrical connections. If the electric wire is not long enough, please contact a local service center authorized and ask for a proper electric wire.
Poor connections may lead to electric shock or fire.
8.Use the specified types of wires for electrical connections between the indoor and outdoor units. Firmly clamp the wires so that their terminals receive no external stresses.
Electric wires with insufficient capacity, wrong wire connections and insecure wire terminals may cause electric shock or fire.

Safety Precautions for Refrigerant

●To realize the function of the air conditioner unit, a special refrigerant circulates in the system. The used refrigerant is the fluoride R32,which is specially cleaned. The refrigerant is flammable and inodorous. Furthermore, it can leads to explosio under certain conditions. But the flammability of the refrigerant is very lo . It can be ignited only by fire
●Compared to common refrigerants, R32 is a nonpolluting refrigerant with no harm to the ozonosphere. The influence upon the greenhouse effect is also lower. R32 has got very good thermodynamic features which lead to a really high energy efficienc . The units therefore need a less filling

WARNING:

●Do not use means to accelerate the defrosting process or to clean, other than those recommended by the manufacture. Should repair be necessary,contact your nearest authorized Service Centre. Any repairs carried out by unqualified personnel may be dangerous. The appliance shall be stored in a room without continuously operating ignition sources. (for example:open flames , an operating gas appliance or an operating electric heate .)
●Do not pierce or burn.
●Appliance shall be installed, operated and stored in a room with a floor area larger than 4m (or 6m)
●Appliance filled with flammable gas R32. For repairs, strictly ollow manufacturers instructions only.Be aware that refrigrants not contain odour.
●Read specialists manual.

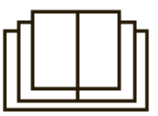

Main Tools for Installation and Maintenance

1. Level meter, measuring tape	2. Screw driver	3. Impact drill, drill head, electric drill
4. Electroprobe	5. Universal meter	6. Torque wrench, open-end wrench, inner hexagon spanner 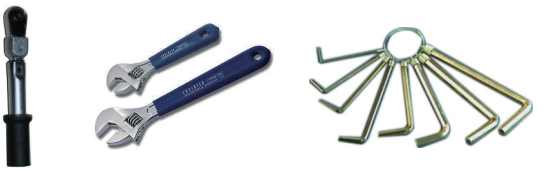
7. Electronic leakage detector	8. Vacuum pump	9. Pressure meter
10. Pipe pliers, pipe cutter	11. Pipe expander, pipe bender	12. Soldering appliance, refrigerant container

8. Installation

8.1 Installation Dimension Diagram

Indoor

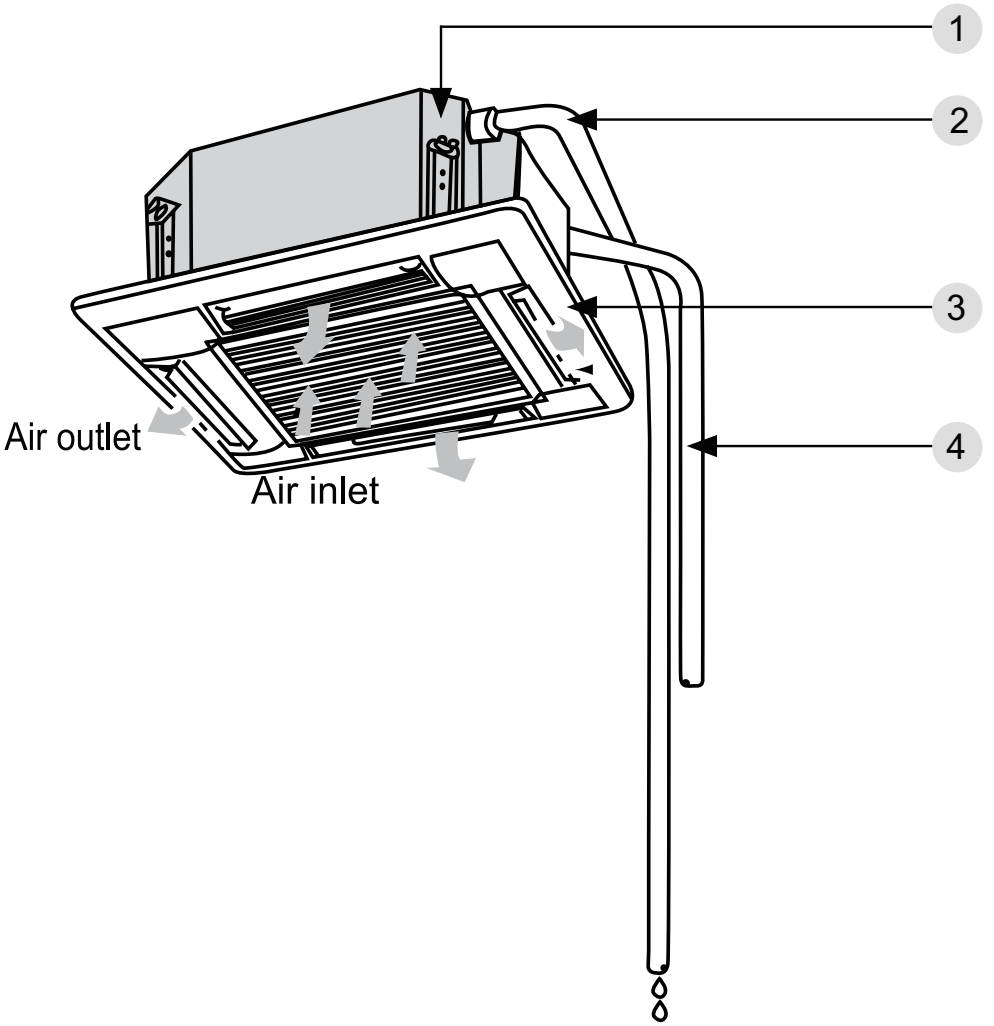

8.2 Installation of Cassette Type

8.2.1. Before Installation

After receiving the machine, please check for any transport damage. If finding any surface o internal damage, please immediately report to the transport company or equipment company in writing.
After receiving the machine, please check the unit and accessories in reference to the packing list.
Ensure that the model is correct and the machine is in good condition. Please also check if the specification and quantity of accessory parts are correct.
Determine the correct handling route and methods, thus to avoid damaging the unit or causing possible hazard. For the sake of protection and safety, it is suggested to move the unit with the packaging box. Even though it is not permitted to do like this under special occasions, do not remove the packaging box, thus to avoid loosening or falling during handling.
Confirm if the installing foundation is solid. When this unit is to be installed on the metal section of the building, make sure that the electrical insulation must comply with applicable standards.
Ensure that the place of installation is far from the area where the inflammable or explosiv substances are stored, thus to avoid possible explosion or fire due to leakage

8.2.2. Installation Site

Select an installation site where the following conditions are fulfilled and that meets your customer' approval.
(1) Obstruct should be put away from the intake or outlet vent of the indoor unit so that the airflo can be blown through all the room.
(2) Make sure that the installation meets the requirement of the schematic diagram of installation spaces.
(3) Select the place where can stand 4 times of the weight of the indoor unit and would not increase the operating noise and vibration.
(4) The horizontality of the installation place should be guaranteed.
(5) Select the place where is easy to drain out the condensate water, and connect with outdoor unit.
(6) Make sure that there are enough space for care and maintenance, and the height fall between the indoor unit and ground is above 1800mm.
(7) When installing the suspension bolt, check if the installation place can stand 4 times of the weight of the unit. If not, reinforce it before installation.
Note: There will be large amount of greasy dirt accumulated on the fan, heat exchanger and water pump located in the dinning room and kitchen, which would reduce the capacity of the heater exchanger, lead to leakage and abnormal operation of the water pump.

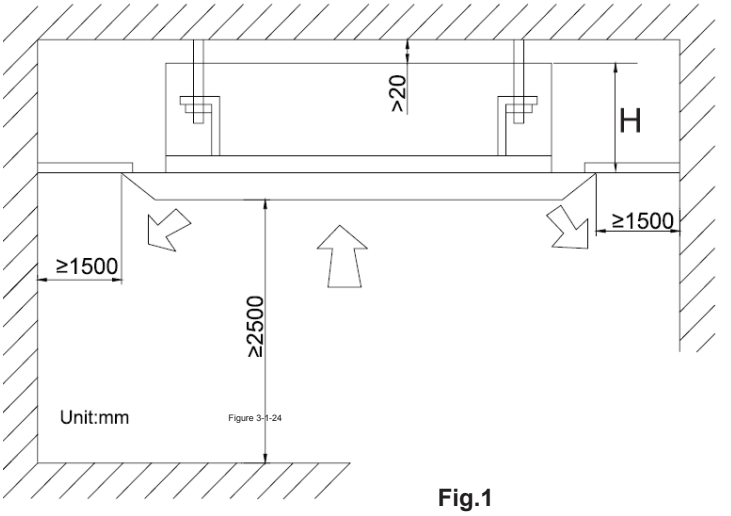

Fig.1

Models	H(mm)
AZI-CR35VB/I	240
AZI-CR50VB/I	
AZI-CR70VB/I	

8.2.3. Installing the Main Body Unit

(1) Install the hoisting stand on the hoisting screw by using nuts and gaskets at both the upper and lower sides of the hoisting stand. To prevent the gasket from breaking off, a gasket anchor board can be helpful.

(2) Install the paper template on the unit, and fix the drain pipe at the outlet vent.

(3) Adjust the unit to the best position.

(4) Check if the unit is installed horizontally at four directions. If not, the water pump and the float switch would function improperly and even lead to water leakage.

(5) Remove the gasket anchor board and tighten the nut remained.

(6). Remove the paper template.

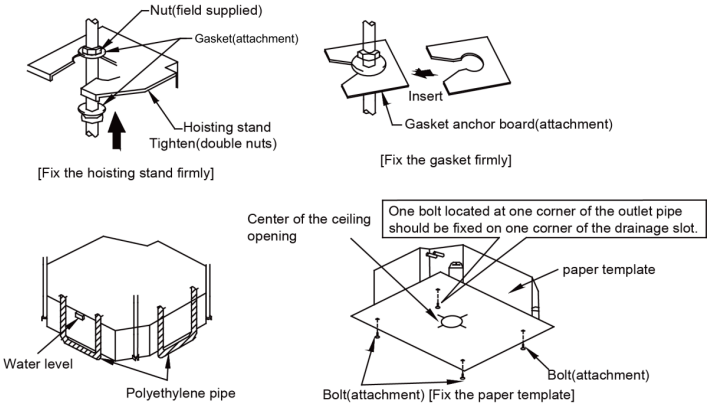

Fig.2

8.2.3. Installing the Suspension Bolts

(1) Using the installation template, drill holes for bolts (four holes). Fig.3

(2) Install the bolts to the ceiling at a place strong enough to hang the unit. Mark the bolt positions from the installation template. With a concrete drill, drill for 12.7 mm (1/2") diameter holes. Fig.4

(3) Insert the anchor bolts into the drilled holes, and drive the pins completely into the anchor bolts with a hammer. Fig.5

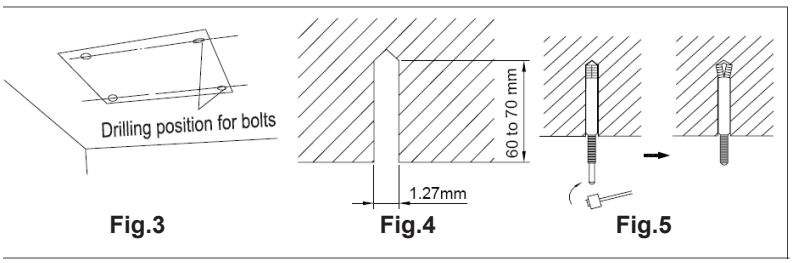

Fig.3 Fig.4 Fig.5

8.2.4. Leveling

The water level test must be done after installing the indoor unit to make the unit is horizontal, as shown below.

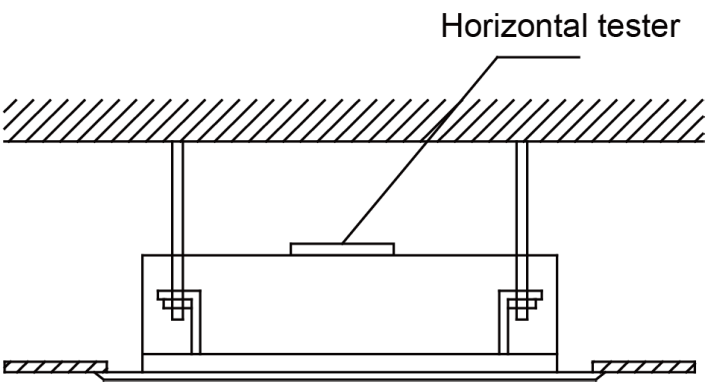

Fig.6

8.2.5. The Panel Installation

(1) See the figure below for the relationship of the front panel and the connecting pipe.

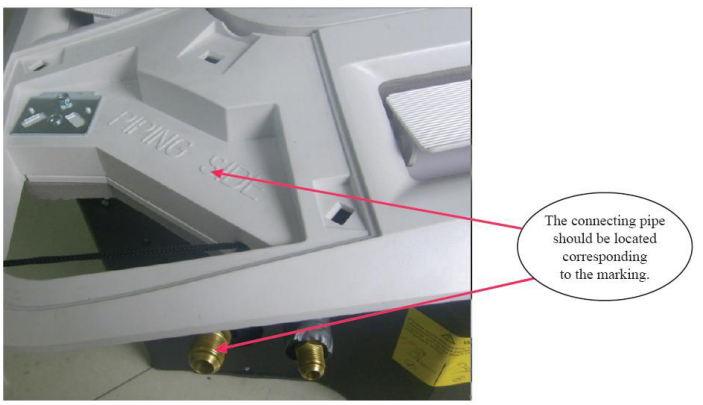

Fig.7

(2) Place the panel at the unit, and latch the hooks beside and opposite the swing flap moto .
(3) Latch other two hooks.
(4) Tighten four hexagonal screws under the latches about 15mm.
(5) Adjust the panel along the direction indicated by the arrow as shown in Fig.8.
(6) Tighten the screws until the thickness of the sealing material between the panel and the indoor unit reduces to 5-8cm.

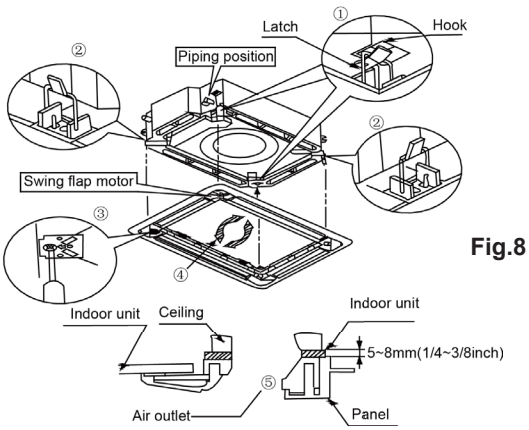

Fig.8

(7) Improper screwing of the screws may cause the troubles shown in Fig9.

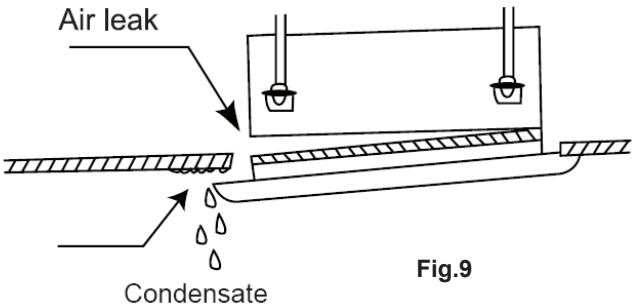

Fig.9

(8) If gap still exists between ceiling and decoration panel after tightening the screws, readjust the height of the indoor unit. Fig10.

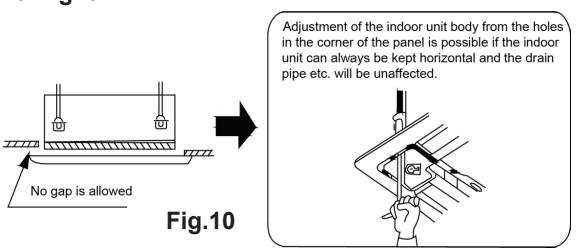

Fig.10

(9) Wire the swing flap motor as shown in Fig 1.

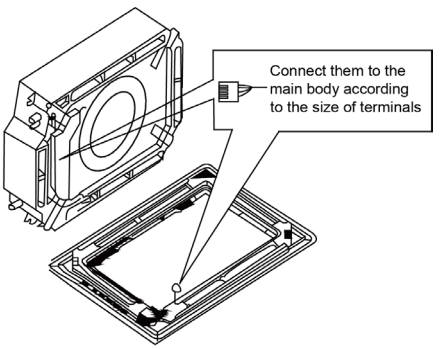

Fig.11

9. Maintenance

9.1 Error Code List

NO.	Name of malfunction	Indoor unit displaying method				AC status	Malfunctions
		Double 8 code display	Indicator display(LED blinks 0.5s-ON/0.5s-OFF)				
			Running LED	Cooling LED	Heating LED		
1	Indoor and outdoor units communication malfunction	E6	Off 3s blink 6 times			Cooling,compressor will stop,indoor fan motor works,Heating:all will stop	Please refer to troubleshooting
2	Indoor unit motor no feedback	H6	Off 3s blink 11 times			Whole unit will stop to run	1.Poor insert for GPF 2.Indoor control board AP1 malfunction 3.Indoor motor M1 malfunction
3	Jump wire cap malfunction protection	C5	Off 3s blink 15 times			Whole unit will stop to run	Indoor control board AP1 jump cap poor connected,please reinsert or replace the jump cap.
4	Indoor ambient sensor open circuit,short circuit	F1		Off 3s blink once		Cooling,dehumidifying:indoor fan motor is runing,other overloads will stop;Heating,whole unit will stop to run.	1.Room temp.sensor is not connected with the control panel AP1 2.Room temp.sensor is damaged
5	Indoor evaporator sensor ciruit open,short circuit	F2		Off 3s blink twice		Cooling,dehumidifying;indoor fan motor runing,other overload will stop;Heating,whole unit will stop.	1,Tube temp.sensor is not connected with the conrtol panel AP1 2.Tube tmep.sensor is damaged
6	In defect of refrigerant	F0				The Dual-8 Code Display will show F0 and the complete unit stops.	1. In defect of refrigerant; 2. Indoor evaporator temperature sensor works abnormally; 3. The unit has been plugged up somewhere.
7	Full water protection	E9				Water level switch	If cut-off of water level switch is detected for 8s successively once energized, the system will enter full water protection. In this case, switch off the unit and then switch it on to eliminate this malfunction.

9.2 Troubleshooting for Main Malfunction

●Indoor unit:

1. Malfunction of Temperature Sensor F1, F2

Main detection points:

- Is the wiring terminal between the temperature sensor and the controller loosened or poorly contacted?
- Is there short circuit due to trip-over of the parts?
- Is the temperature sensor broken?
- Is mainboard broken?

Malfunction diagnosis process:

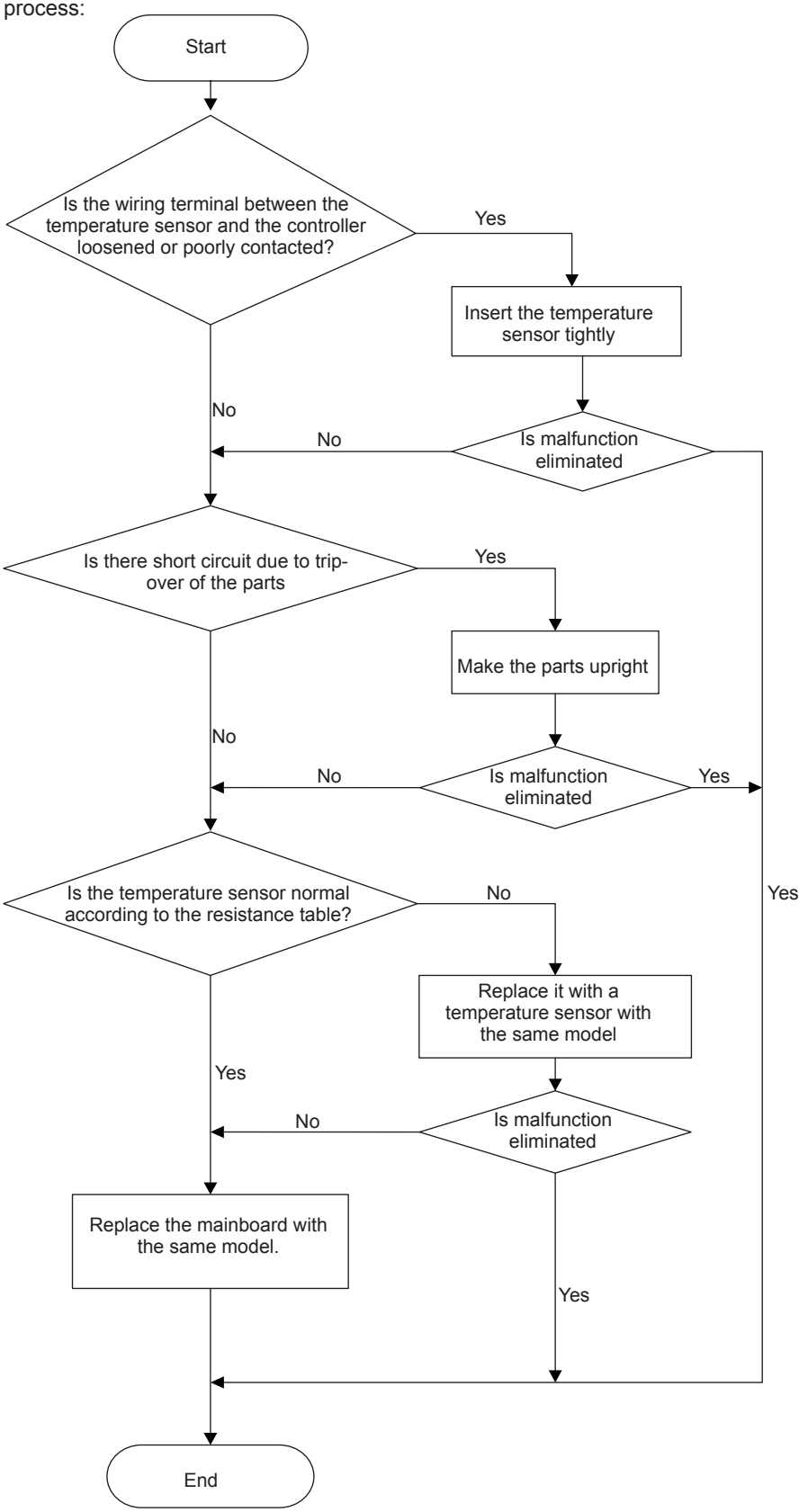

2. Malfunction of Blocked Protection of IDU Fan Motor H6

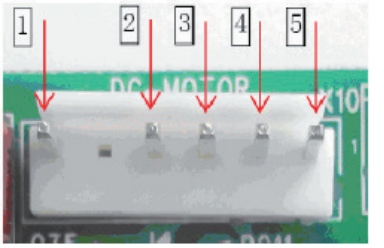

Start

Turn the fan blades by hand under power-off condition

Whether the fan blades can run smoothly?

No → Adjust the motor and blade assembly so that rotor can run smoothly. → Turn unit on to check whether the malfunction is eliminated.

Yes → Under power-off condition, check whether the wiring terminal between indoor fan and main board is loose.

Yes → Reinsert the wiring terminal of indoor fan. → Turn unit on to check whether the malfunction is eliminated.

No → Connect power and restart the unit. Test whether the voltage between terminal 1 and terminal 2 of motor interface is within 280~310VDC.

No → It's the malfunction of main board. Replace a new main board that is of the same model.

Yes → Then check whether the voltage between terminal 2 and terminal 3 of the motor interface is 15VDC.

No → It's the malfunction of main board. Replace a new main board that is of the same model.

Yes → Then check whether there is voltage between terminal 2 and terminal 4 of the motor interface.

No → It's the malfunction of main board. Replace a new main board that is of the same model.

Yes → It's the malfunction of motor. Replace a new motor that is of the same model. → END

Yes → END

3. Malfunction of Protection of Jumper Cap C5

Main detection points:

- Is there jumper cap on the mainboard?
- Is the jumper cap inserted correctly and tightly?
- The jumper is broken?
- The motor is broken?
- Detection circuit of the mainboard is defined abnormal?

Malfunction diagnosis process:

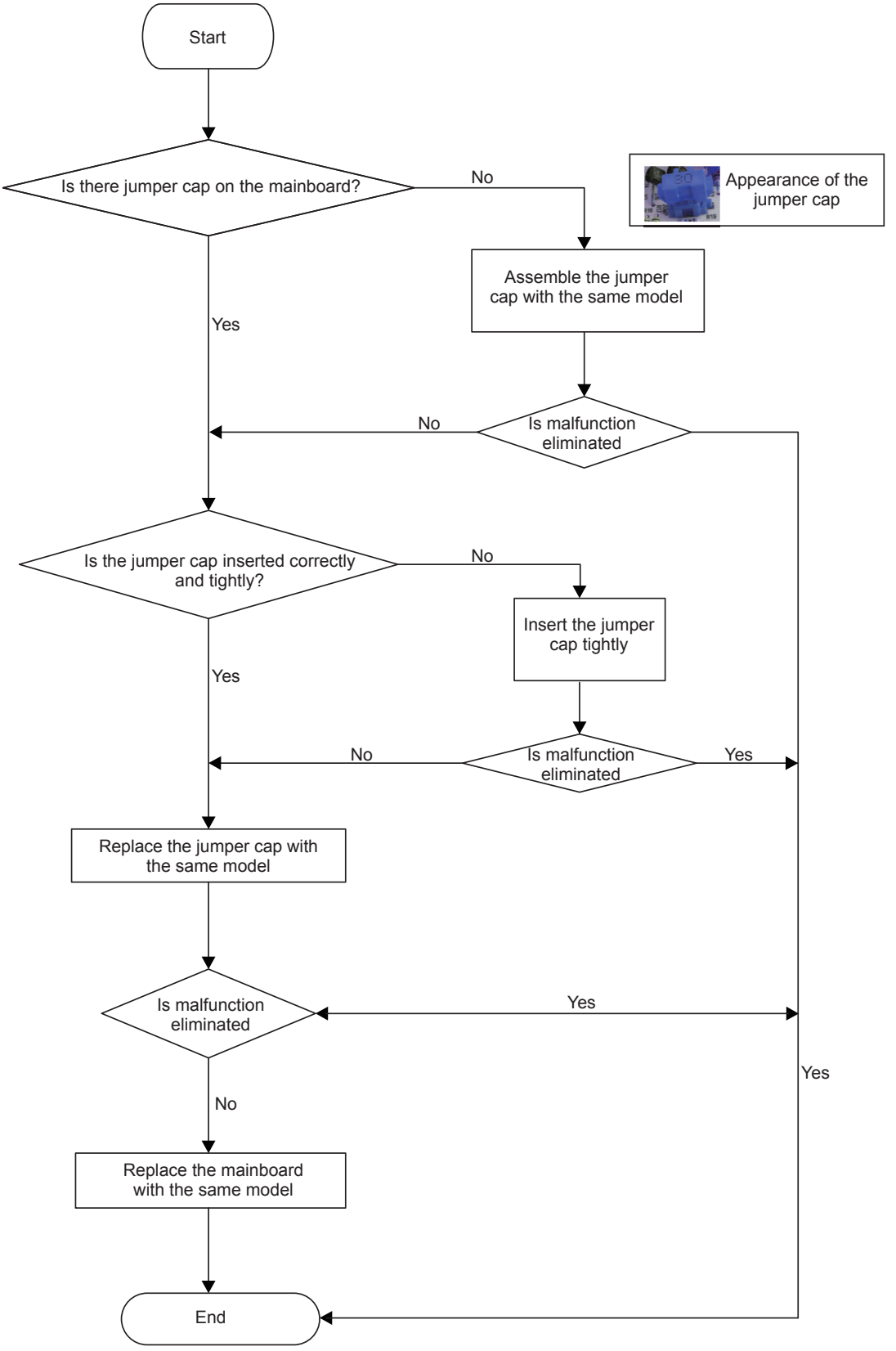

4. Communication malfunction E6

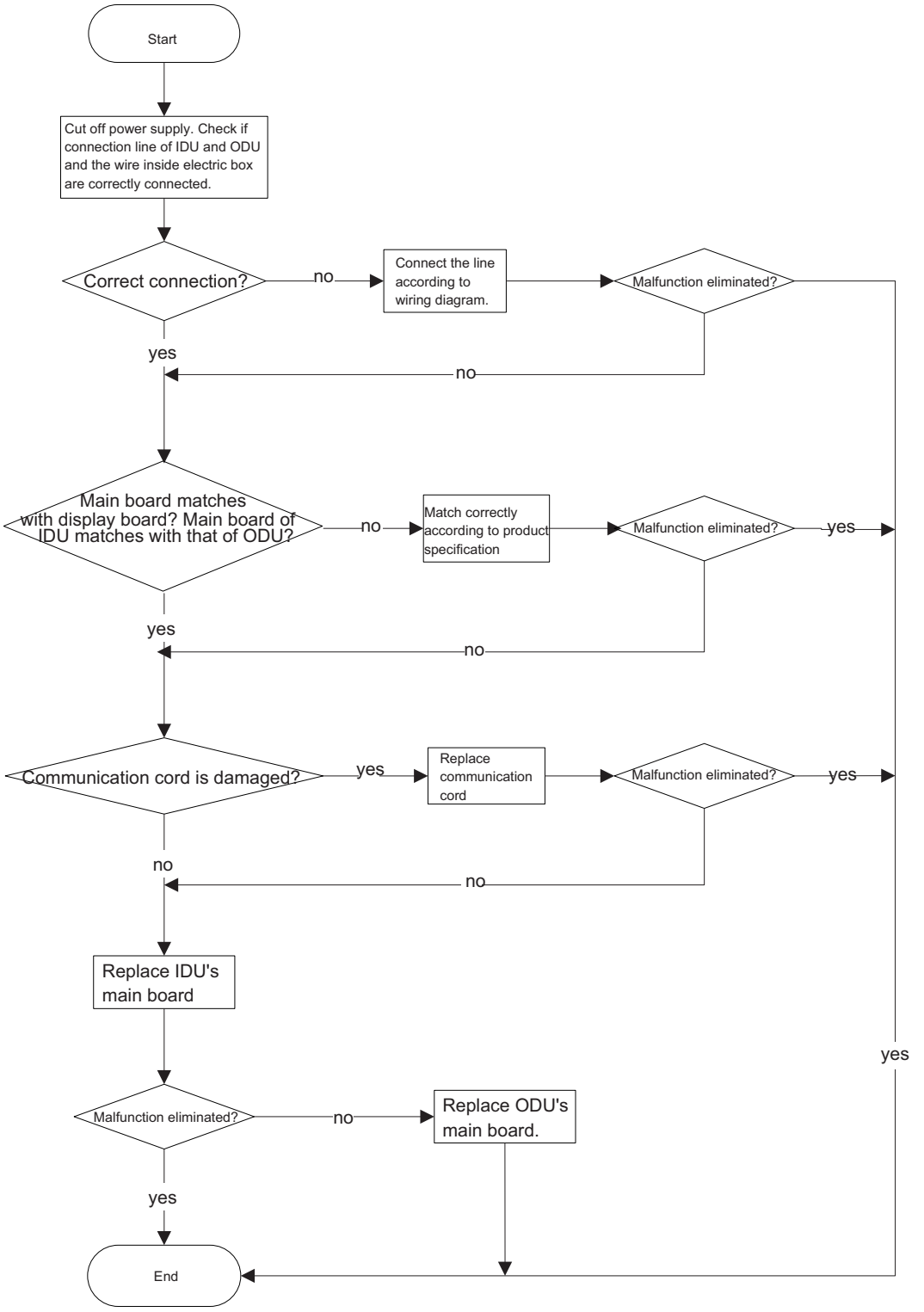

5. Malfunction of Insufficient fluorine protection F0

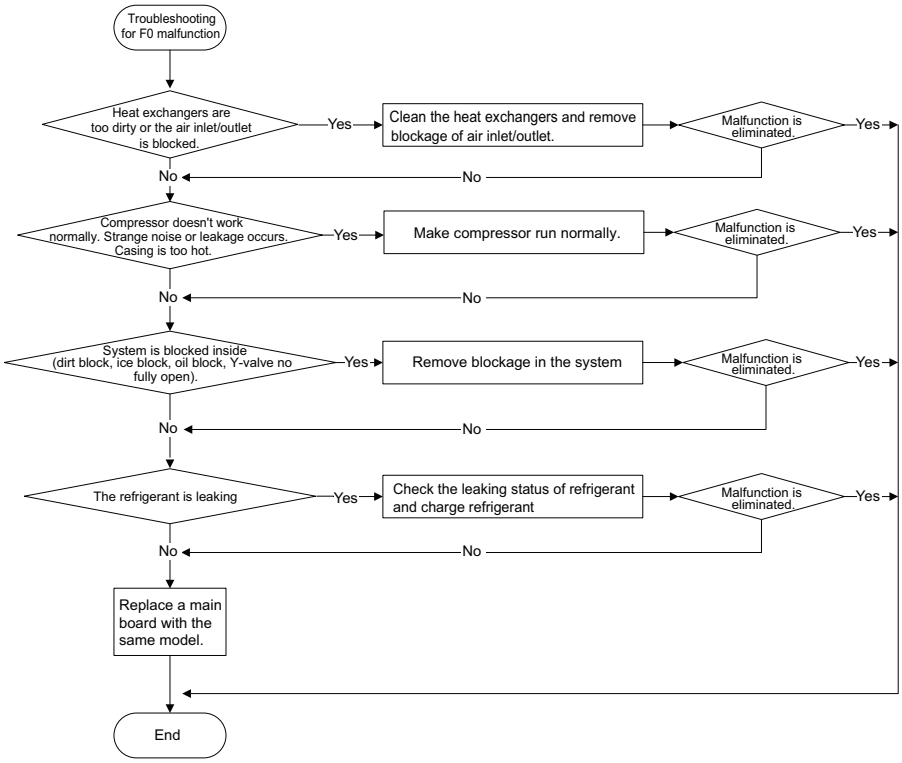

6. Full Water Protection E9

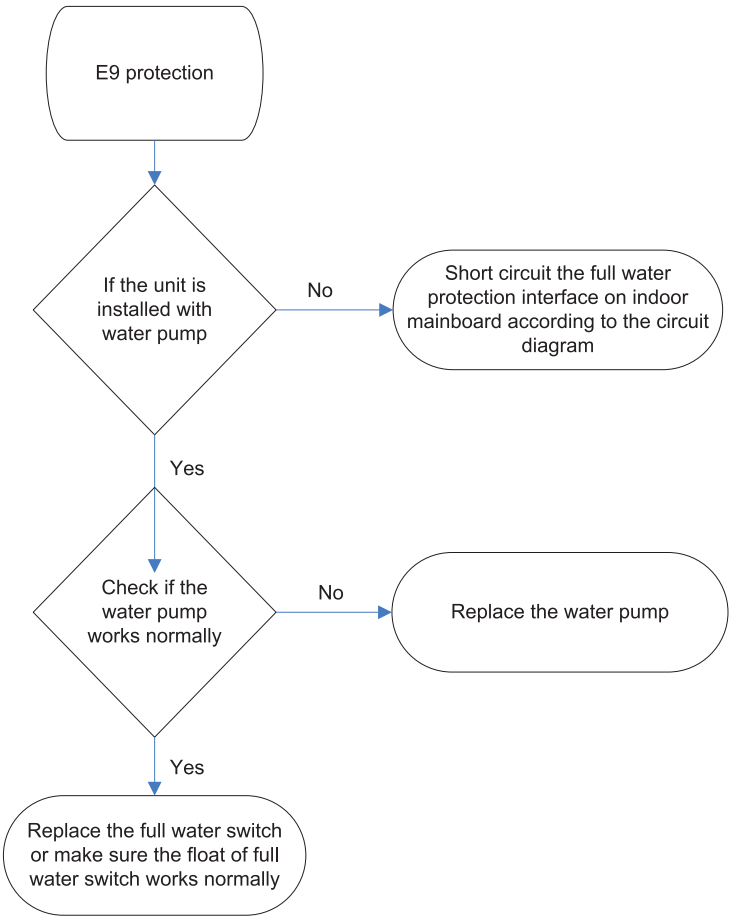

9.3 Maintenance Method for Normal Malfunction

1. Air Conditioner Can't be Started Up

Possible Causes	Discriminating Method (Air conditioner Status)	Troubleshooting
No power supply, or poor connection for power plug	After energization, operation indicator isn't bright and the buzzer can't give out sound	Confirm whether it's due to power failure. If yes, wait for power recovery. If not, check power supply circuit and make sure the power plug is connected well.
Wrong wire connection between indoor unit and outdoor unit, or poor connection for wiring terminals	Under normal power supply circumstances, operation indicator isn't bright after energization	Check the circuit according to circuit diagram and connect wires correctly. Make sure all wiring terminals are connected firmly
Electric leakage for air conditioner	After energization, room circuit breaker trips off at once	Make sure the air conditioner is grounded reliably Make sure wires of air conditioner is connected correctly Check the wiring inside air conditioner. Check whether the insulation layer of power cord is damaged; if yes, place the power cord.
Model selection for air switch is improper	After energization, air switch trips off	Select proper air switch
Malfunction of remote controller	After energization, operation indicator is bright, while no display on remote controller or buttons have no action.	Replace batteries for remote controller Repair or replace remote controller

2. Poor Cooling (Heating) for Air Conditioner

Possible Causes	Discriminating Method (Air conditioner Status)	Troubleshooting
Set temperature is improper	Observe the set temperature on remote controller	Adjust the set temperature
Rotation speed of the IDU fan motor is set too low	Small wind blow	Set the fan speed at high or medium
Filter of indoor unit is blocked	Check the filter to see it's blocked	Clean the filter
Installation position for indoor unit and outdoor unit is improper	Check whether the installation postion is proper according to installation requirement for air conditioner	Adjust the installation position, and install the rainproof and sunproof for outdoor unit
Refrigerant is leaking	Discharged air temperature during cooling is higher than normal discharged wind temperature; Discharged air temperature during heating is lower than normal discharged wind temperature; Unit's pressure is much lower than regulated range	Find out the leakage causes and deal with it. Add refrigerant.
Malfunction of 4-way valve	Blow cold wind during heating	Replace the 4-way valve
Malfunction of capillary	Discharged air temperature during cooling is higher than normal discharged wind temperature; Discharged air temperature during heating is lower than normal discharged wind temperature; Unit't pressure is much lower than regulated range. If refrigerant isn't leaking, part of capillary is blocked	Replace the capillary
Flow volume of valve is insufficient	The pressure of valves is much lower than that stated in the specification	Open the valve completely
Malfunction of horizontal louver	Horizontal louver can't swing	Refer to point 3 of maintenance method for details
Malfunction of the IDU fan motor	The IDU fan motor can't operate	Refer to troubleshooting for H6 for maintenance method in details
Malfunction of the ODU fan motor	The ODU fan motor can't operate	Refer to point 4 of maintenance method for details
Malfunction of compressor	Compressor can't operate	Refer to point 5 of maintenance method for details

3. Horizontal Louver Can't Swing

Possible Causes	Discriminating Method (Air conditioner Status)	Troubleshooting
Wrong wire connection, or poor connection	Check the wiring status according to circuit diagram	Connect wires according to wiring diagram to make sure all wiring terminals are connected firmly
Stepping motor is damaged	Stepping motor can't operate	Repair or replace stepping motor
Main board is damaged	Others are all normal, while horizontal louver can't operate	Replace the main board with the same model

4. ODU Fan Motor Can't Operate

Possible causes	Discriminating method (air conditioner status)	Troubleshooting
Wrong wire connection, or poor connection	Check the wiring status according to circuit diagram	Connect wires according to wiring diagram to make sure all wiring terminals are connected firmly
Capacity of the ODU fan motor is damaged	Measure the capacity of fan capacitor with an universal meter and find that the capacity is out of the deviation range indicated on the nameplate of fan capacitor.	Replace the capacity of fan
Power voltage is a little low or high	Use universal meter to measure the power supply voltage. The voltage is a little high or low	Suggest to equip with voltage regulator
Motor of outdoor unit is damaged	When unit is on, cooling/heating performance is bad and ODU compressor generates a lot of noise and heat.	Change compressor oil and refrigerant. If no better, replace the compressor with a new one

5. Compressor Can't Operate

Possible causes	Discriminating method (air conditioner status)	Troubleshooting
Wrong wire connection, or poor connection	Check the wiring status according to circuit diagram	Connect wires according to wiring diagram to make sure all wiring terminals are connected firmly
Capacity of compressor is damaged	Measure the capacity of fan capacitor with an universal meter and find that the capacity is out of the deviation range indicated on the nameplate of fan capacitor.	Replace the compressor capacitor
Power voltage is a little low or high	Use universal meter to measure the power supply voltage. The voltage is a little high or low	Suggest to equip with voltage regulator
Coil of compressor is burnt out	Use universal meter to measure the resistance between compressor terminals and it's 0	Repair or replace compressor
Cylinder of compressor is blocked	Compressor can't operate	Repair or replace compressor

6. Air Conditioner is Leaking

Possible causes	Discriminating method (air conditioner status)	Troubleshooting
Drain pipe is blocked	Water leaking from indoor unit	Eliminate the foreign objects inside the drain pipe
Drain pipe is broken	Water leaking from drain pipe	Replace drain pipe
Wrapping is not tight	Water leaking from the pipe connection place of indoor unit	Wrap it again and bundle it tightly

7. Abnormal Sound and Vibration

Possible causes	Discriminating method (air conditioner status)	Troubleshooting
When turn on or turn off the unit, the panel and other parts will expand and there's abnormal sound	There's the sound of "PAPA"	Normal phenomenon. Abnormal sound will disappear after a few minutes.
When turn on or turn off the unit, there's abnormal sound due to flow of refrigerant inside air conditioner	Water-running sound can be heard	Normal phenomenon. Abnormal sound will disappear after a few minutes.
Foreign objects inside the indoor unit or there're parts touching together inside the indoor unit	There's abnormal sound fro indoor unit	Remove foreign objects. Adjust all parts' position of indoor unit, tighten screws and stick damping plaster between connected parts
Foreign objects inside the outdoor unit or there're parts touching together inside the outdoor unit	There's abnormal sound fro outdoor unit	Remove foreign objects. Adjust all parts' position of outdoor unit, tighten screws and stick damping plaster between connected parts
Short circuit inside the magnetic coil	During heating, the way valve has abnormal electromagnetic sound	Replace magnetic coil
Abnormal shake of compressor	Outdoor unit gives out abnormal sound	Adjust the support foot mat of compressor, tighten the bolts
Abnormal sound inside the compressor	Abnormal sound inside the compressor	If add too much refrigerant during maintenance, please reduce refrigerant properly. Replace compressor for other circumstances.

10. Removal Procedure

⚠ **Warning: Be sure to wait for a minimum of 20 minutes after turning off all power supplies and discharge the refrigerant completely before removal.**

Step	Procedure	
1. Loosen the screws fixing the water tray		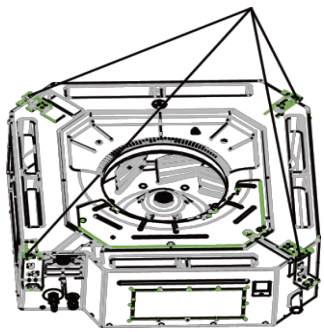
	Use screwdriver to loosen the screws fixing the water tray	
2. Remove the water tray		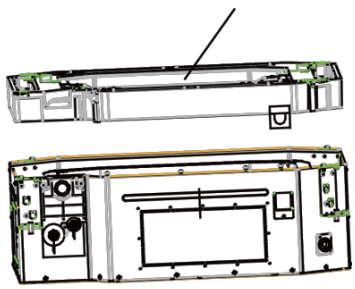
	Remove the water tray	
3. Loosen the bolts fixing the fan		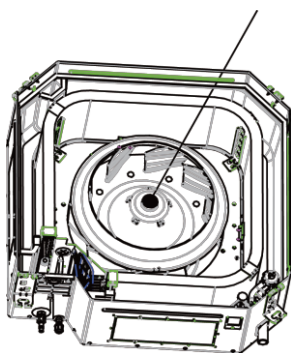
	Use spanner to loosen the bolts fixing the fan.	

Step	Procedure	
4. Remove the fan		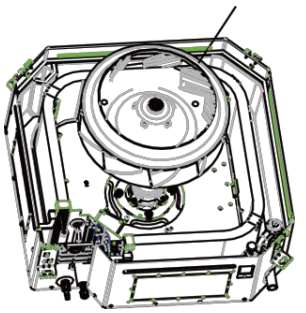
	Remove the fan	
5. Loosen the screws fixing the motor		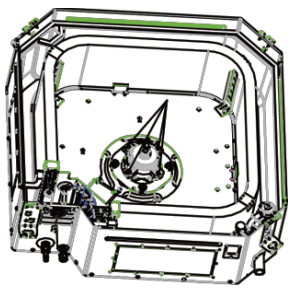
	Use screwdriver to loosen the screws fixing the motor	
6. Remove the motor and replace it		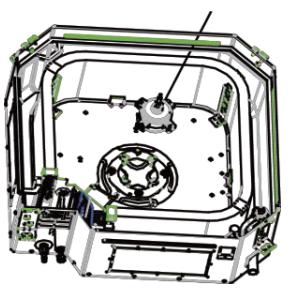
	Remove the motor and replace it	
7. Tighten the screws fixing the motor		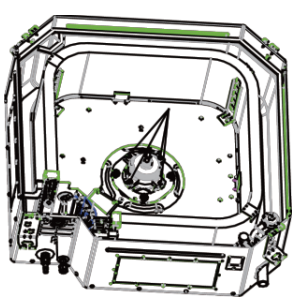
	Use screwdriver to tighten the screws fixing the motor.	

Step	Procedure	
8. Mount the fan and tighten the fixing bolts		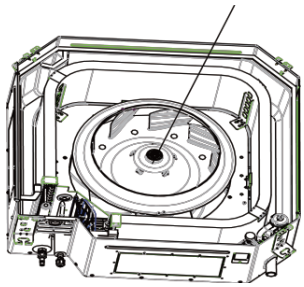
	Mount the fan and use spanner to tighten the bolts fixing the fan.	
9. Mount the water tray and tighten the screws		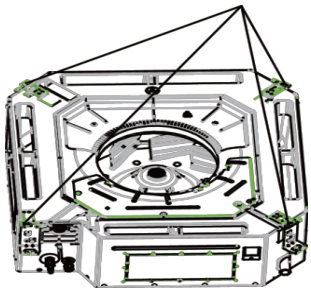
	Use screwdriver to loosen the screws fixing the water tray	
10.Removal and Installation of Drainage Pump		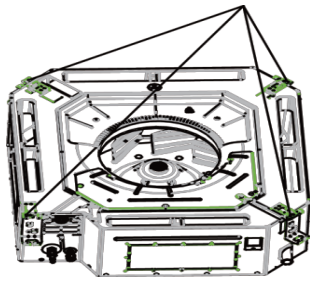
a	Loosen the screws fixing the water tray Use screwdriver to loosen the screws fixing the water tray	
b	Remove the water tray Remove the water pump and replace it.	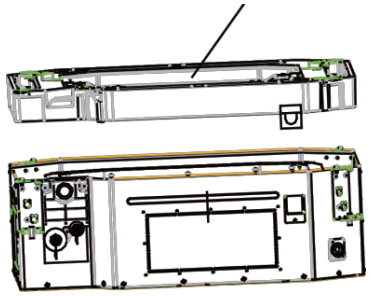
c	Pull out the water outlet pipe and loosen the screws fixing the water pump. Pull out the water outlet pipe and use screwdriver to loosen the screws fixing the water pump.	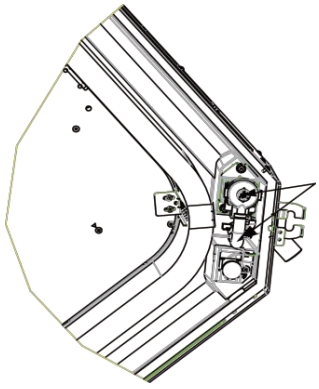

Step	Procedure	
e	Take out the pump and replace it	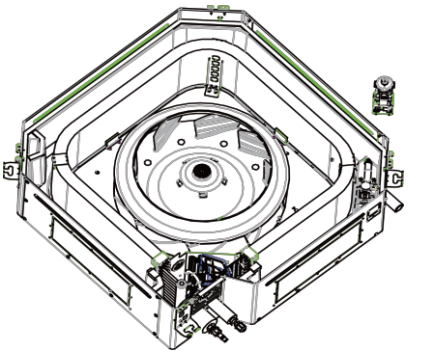
f	Connect the drainage pipe and use screwdriver to tighten the screws fixing the water pump.	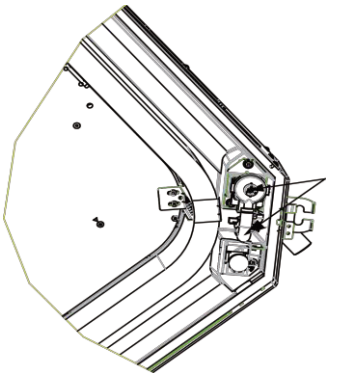
g	Mount the water tray and tighten the screws Use screwdriver to loosen the screws fixing the water tray	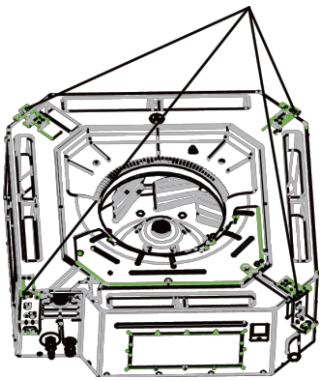

AZURI®

DELTRON®

General representative of the
Azuri air conditioners

Split, Vukovarska 148
Tel: +385 (0)21 453 400
Fax: +385 (0)21 473 943
deltron@deltron.hr

Zagreb, Zagrebačka avenija 104
Tel: +385 (0)1 60 64 777
Fax: +385 (0)1 60 64 778
deltron.zagreb@deltron.hr

Sarajevo, Pijačna 14K
Tel: +387 (0)33 840 200
Fax: +387 (0)33 840 203
deltron.sarajevo@deltron.ba